SMOKE TO INK CONVERSION SYSTEM USING ARDUINO UNO

PROJECT REPORT

SOLVIX

Team Name : Solvix

Team Member :

AROKIYA NITHISH. J

ISHWARYA. M

(Vel Tech University)

Domain : Smart Automation

Theme : Smart Cities

Date : 26/04/2025

ABSTRACT:

This project captures smoke emissions, filters carbon particles, and converts them into ink using IoT technology. It helps reduce air pollution, creates a valuable product, and enables real-time monitoring for industries, vehicles, and smart cities. Pollution, especially airborne carbon emissions (like soot from vehicles and 2factories), contributes to climate change and health issues. Managing or reducing this pollution is a global concern. The idea of a pollution-to-ink converter tackles this by turning captured pollutants into usable ink, thus recycling waste and reducing environmental harm.

SUSTAINABLE CITIES AND COMMUNITIES" focus on creating urban environments that are environmentally friendly, economically viable, and socially inclusive. With rapid urbanization, cities face challenges such as air pollution, waste management, and resource depletion. The goal of sustainable cities is to reduce carbon footprints, enhance public health, and promote efficient resource use through smart technologies and green initiatives.

"SMOKE TO INK CONVERSION SYSTEM" Air pollution, particularly from vehicular emissions and industrial activities, poses a significant threat to urban sustainability. The IoT-based Smoke to Ink Conversion System aims to address this challenge by capturing harmful airborne pollutants and repurposing them into usable ink. This system integrates IoT sensors to monitor air quality in real time and optimize the smoke collection process

TABLE OF CONTENTS

CHAPTER NO.	TITLE	PAGE NO.
	ABSTRACT	iii
	LIST OF FIGURES	v
	LIST OF ABBREVIATIONS	vi
1	INTRODUCTION	1
2	EXISTING SYSTEM	5
3	PROBLEM IDENTIFICATION	8
4	PROPOSED SYSTEM	11
5	BLOCK DIAGRAM/DESIGN	14
6	MATERIALS	16
7	WORKING	17
8	SOURCE DETAILS	20
9	SOURCE CODE	22
10	HARDWARE DISCUSSION	25
11	ADVANTAGE/DISADVANTAGE	37
12	REFERENCE	28

LIST OF FIGURES

FIGURE NO.	TITLE	PAGE NO.
5.1	Block Diagram	14
7.1	Working diagram	19
10.1	Model project	25

LIST OF ABBREVIATIONS

SYMBOLS	ABBREVIATIONS
UNO	One in Italian
MQ2	Metal oxide semiconductor sensor

CHAPTER I

INTRODUCTION

The smoke to ink conversion system project is an innovative environmental initiative that transforms harmful air pollutants, particularly soot from vehicle and industrial emissions, into usable ink products. This concept addresses two pressing global challenges: the detrimental effects of air pollution on health and the environmental impact of traditional ink production processes. Urban centres worldwide, especially in regions like India, face severe air quality issues due to vehicular emissions and industrial activities. For instance, Delhi has been reported to have some of the most polluted air globally, leading to significant health concerns. Traditional ink production often relies on carbon black derived from fossil fuels, contributing to environmental degradation. The Smoke-to-Ink Converter project offers a sustainable alternative by repurposing existing pollutants into valuable products. The core technology behind this initiative involves capturing particulate matter from exhaust systems using specialized devices

This device attaches to vehicle exhaust pipes to capture soot particles. The collected soot undergoes a purification process to remove harmful substances, resulting in a purified carbon pigment that can be used to produce various ink products. The smoke-to-ink conversion system is an innovative method that helps turn air pollution into something useful black ink. This system mainly targets soot, which is a black powdery substance found in smoke from cars, factories, and burning materials. Soot is made up of tiny carbon particles that are harmful to the environment and human health. The system uses a special device, often placed near exhaust pipes or chimneys, to capture this smoke before it enters the air. Inside the device, filters trap

the soot particles while allowing the rest of the gases to pass through. The collected soot is then carefully cleaned to remove any dangerous chemicals, heavy metals, or oil. Once the soot is clean and safe to use, it is processed and mixed with oils and chemicals to create high-quality black ink. This ink can be used in pens, printers, and even for painting or printing. One well-known example of this technology is "Air-Ink," which turns pollution into ink for art and writing. This system is not only useful but also helps raise awareness about pollution and the importance of recycling. It is a creative way to reduce harmful emissions while producing a valuable product. By converting smoke into ink, we take a step toward cleaner air and a more sustainable future. This also encourages industries and individuals to think of smart ways to fight pollution using science and innovation. Innovation Chakr Shield Designed for diesel generators this device captures up to 90% of soot particles from exhaust emissions. The collected material is then processed and sold to ink manufacturers.

The ink produced through these methods is utilized in various applications

Art and Street Murals Artists have used this ink to create murals and graffiti, turning urban pollution into expressions of creativity. Commercial Products Brands like Panagia have incorporated this ink into their fashion lines, promoting sustainability in the textile industry. Industrial Use the ink serves as an eco-friendly alternative in printing and manufacturing processes. By converting pollutants into usable products, the Smoke-to-Ink Converter project not only mitigates air pollution but also contributes to a circular economy, where waste is minimized, and resources are reused.

The smoke-to-ink conversion system uses several important components that work together to collect polluted smoke, clean it, and turn it into usable ink. One of the main parts is the smoke collector or capture device, which is usually fitted near an exhaust pipe, chimney, or any source of smoke. Its job is to catch the smoke before it goes into the air. Inside this device, there is often a chamber or a pipe system that directs the smoke to the next stage. The smoke then passes through a filter unit. This part is very important because it traps the soot particles, which are tiny black bits of carbon found in the smoke. The filter can be made using fine mesh, HEPA filters, or special materials that attract carbon particles using static electricity or magnetic fields. Some advanced systems also use cyclonic separators or electrostatic precipitators to improve the collection of soot.

Once the carbon particles are collected, they are stored in a container or chamber for further processing. At this point, the system also includes a cleaning unit, where the soot is treated to remove harmful chemicals, oils, or metals that might be present. This may involve washing the particles using alcohol, chemicals, or solvents. After cleaning, the dry, safe carbon is moved to the mixing chamber. Here, it is mixed with binders, solvents, and oils to form ink. Common mixing ingredients include vegetable oil, rubbing alcohol, or other eco-friendly liquids that help the ink flow and stick to surfaces like paper. Other components in the system may include pumps, tubes, and valves to move smoke and liquid from one part to another. A cooling system may also be used to lower the temperature of the smoke before filtering. Some setups include sensors to measure air quality or the amount of soot collected. At the end of the process, the final product black ink is collected in a storage bottle or cartridge, ready to be used in pens, markers, or printers. All these parts work together smoothly to create a system that not only reduces pollution but also creates something useful from waste.

This project combines the smoke-to-ink system uses both mechanical and chemical components to work efficiently in an eco-friendly way. The mechanical components include the smoke collector, which captures smoke from vehicles or chimneys, and filters that trap the soot (black carbon particles) from the smoke. Fans or pumps are often used to move the smoke through the system. Some systems also have pipes, chambers, and containers to hold and transport smoke or collected soot. These parts work together to handle the physical movement and separation of smoke.

The chemical components come into use after soot is collected. The soot is cleaned using solvents or alcohol to remove harmful materials. Then, it is mixed with other chemicals like binders, oils, and thinners to turn the carbon into usable ink. These chemicals help give the ink proper thickness and flow. All the materials used are chosen to be safe and eco-friendly, meaning they do not harm the environment. Together, these mechanical and chemical parts create a basic mechanical and chemical components in a smart and eco-friendly way system that reduces pollution and creates something useful from waste.

CHAPTER II

EXISTING SYSTEM

The existing smoke-to-ink conversion system is a modern and creative solution that transforms harmful air pollution into something useful black ink. This system has been developed and tested by several organizations, one of the most popular being Graviky Labs, an Indian startup known for its product called AIR-INK. The basic idea of the existing system is to collect carbon soot from smoke before it escapes into the atmosphere, clean it, and then convert it into high-quality ink. The system begins by attaching a special smoke collection device to exhausts of vehicles, chimneys, or industrial machines. This device is often compact and made to handle hot gases. It captures the smoke and separates the particulate matter (mainly carbon) from other gases. Inside this device, filters or electrostatic systems are used to trap the carbon particles from the flowing smoke. The clean air is released back, and the trapped carbon (called soot) is collected in a small container.

Once the soot is collected, it goes through a purification process. This is important because smoke also contains toxic substances like heavy metals, harmful chemicals, and oil particles. To make the soot safe to use, it is washed and treated using solvents, alcohol, or other non-toxic cleaning agents. After purification, the remaining material is a fine black powder, mostly made of carbon. This cleaned carbon is then mixed with different chemical ingredients such as binders, oils, and solvents to turn it into a thick black liquid ink. The ink is then filled into containers, such as pen cartridges, ink bottles, or printer cartridges.

The system is designed to be portable, low-cost, and eco-friendly, which means it can be used in many places without needing heavy machines or high energy consumption. Some setups are small enough to fit on bikes or cars, while others are designed for factories. The whole process is energy-efficient and helps reduce air pollution while producing a valuable product. This system has already been used by artists, designers, and printing companies who want to create environmentally friendly products. The goal is not only to reduce pollution but also to make people think differently about waste—seeing it as a resource instead of just trash. Overall, the existing smoke-to-ink system proves that with the right technology and creativity, we can fight pollution and create something useful at the same time. It encourages innovation, sustainability, and responsible use of science in daily life.

Graviky Labs Kaalink Technology the Kaalink is a cylindrical filtration device retrofitted to vehicle exhaust pipes. Functionality It captures up to 95% of particulate matter emitted from the exhaust using electrostatic precipitation, without affecting engine performance. Soot is collected in cartridges within the Kaalink device. After about 15–20 days, the cartridges are removed and emptied into special collection units. The collected soot undergoes a proprietary process to remove heavy metals and carcinogens. The purified carbon is then used to create various types of inks and paints. Approximately 30 ml of ink can be produced from 45 minutes of vehicle emissions.

Chakr Shield Technology the Chakr Shield is a device designed to capture particulate matter from diesel generator exhausts. It uses a solvent-based system to block up to 90% of the polluting particles emitted from the exhaust, without damaging the engine. Particulate matter is captured from diesel generator exhausts. The captured particles are converted into a substance that can be used for ink and paints.

The idea behind this system came from the increasing concern about air pollution, especially in big cities with heavy traffic and industrial smoke. Scientists and environmentalists wanted to find a way to not just reduce pollution but also recycle it. This led to the development of technology that could turn harmful soot into a useful product like ink. Depending on the system size and usage, around 30 to 50 minutes of car exhaust smoke can produce enough soot to fill one standard ink pen. This may seem small, but with thousands of cars and factories, a lot of soot can be collected every day. One of the best things about this system is that it is easy to install and does not require major changes to existing machines. It shows people that even pollution can be turned into something creative and useful. The project has received awards and praise for its innovation and positive impact on the environment. It also motivates students and young inventors to think of smart solutions for global problems. Most importantly, this system is a great example of how science and art can come together to build a cleaner, greener future for everyone.

CHAPTER III

PROBLEM IDENTIFICATION

The world faces a growing problem with air pollution, particularly from the burning of fossil fuels in vehicles, factories, and power plants. This pollution, mainly in the form of smoke and soot, is harmful to both the environment and human health. The release of smoke into the air contains harmful substances, including carbon dioxide, carbon monoxide, and tiny particulate matter (soot), which are difficult to remove once they are released into the atmosphere. These pollutants are linked to various health issues, including respiratory problems, heart disease, and even cancer. The increasing levels of air pollution also contribute to climate change, as these particles can absorb sunlight, leading to global warming. This problem has led to a growing need for effective ways to reduce smoke and recycle harmful pollutants. One of the biggest challenges is that soot and other carbon particles, although harmful to the environment, are often ignored and allowed to disperse into the air. Traditional methods of reducing air pollution, such as using filters and scrubbers in industrial machines, can be expensive, inefficient, and still leave harmful emissions. Additionally, the disposal of soot is another issue, as it is often not treated properly and can end up in landfills or water bodies, causing further environmental damage. At the same time, there is an increasing demand for environmentally friendly alternatives in the manufacturing of everyday products, such as ink. Traditional ink production relies on chemicals and petroleum-based materials, which are non-renewable and harmful to the environment.

The smoke-to-ink conversion system was developed to solve these interrelated problems. It focuses on capturing the very soot and carbon particles that are usually harmful, cleaning them, and then turning them into something useful, such as ink. However, even with this innovative solution, there are challenges. First, the collection of soot from various sources, including vehicles and factories, requires a lot of equipment and technology. The soot needs to be carefully separated from other gases, and there is also a risk that the collected soot might contain harmful chemicals or metals that can make it unsafe to use. Cleaning and purifying the soot is another issue that requires careful handling to ensure it does not pose any health risks when converted into ink. Another challenge is scaling this technology. While small systems can work on a local level (e.g., for individual vehicles or small factories), larger systems need to be developed for bigger industries and cities to have a broader impact. Additionally, maintaining the quality of the ink produced is crucial. It needs to be of high quality to be usable in pens, printers, or artwork without compromising on safety and efficiency. There is also the problem of ensuring that the entire process remains cost-effective, especially in places with limited resources.

Despite these challenges, the smoke-to-ink conversion project addresses several key environmental and health issues by transforming pollution into a resource. It offers an innovative solution to pollution, helps reduce the use of harmful chemicals in ink production, and promotes sustainability. The main goal is to create a circular system one that reuses harmful waste and creates something valuable. This could lead to a reduction in the overall carbon footprint, better air quality, and a more sustainable approach to producing everyday products. By identifying these problems, the project not only addresses the growing environmental crisis but also sets an example for future innovations in pollution control, resource management, and ecofriendly

product creation. It pushes industries, governments, and individuals to think about how waste can be recycled and repurposed for the good of the planet.

The soot collected from exhaust systems contains impurities such as heavy metals, oils, and volatile organic compounds (VOCs). These contaminants must be effectively removed to ensure the final ink product is safe and non-toxic. The purification process involves multiple stages, including gravity-based separation, comminution, catalysed activation, and grinding to achieve a consistent particle size suitable for ink production. While the technology has shown promise on a small scale, scaling up to meet the demands of large-scale ink production poses significant challenges. The initial investment for installing capture devices like Kaalink or Chakr Shield can be high, which may deter adoption, especially among small and medium-sized enterprises. Additionally, the cost of purification and processing the captured soot adds to the overall expense. Achieving consistent quality in the ink produced from captured soot is crucial for its acceptance in various applications. Variations in the composition of the captured particulate matter can lead to inconsistencies in the final ink product, affecting its performance and suitability for different uses. The use of air pollution-derived ink in consumer products raises regulatory and safety concerns. Ensuring that the ink complies with environmental and health standards is essential for its widespread adoption.

CHAPTER IV

PROPOSED SYSTEM

The proposed system for the smoke-to-ink conversion project is designed to capture harmful soot particles from smoke and transform them into usable black ink through a clean, low-cost, and eco-friendly process. This system aims to solve the twin problems of air pollution and harmful chemical use in ink production. The process begins with the installation of a smoke-capturing device, which can be attached to exhaust pipes of vehicles, industrial chimneys, or generators. This device is built using strong heat-resistant materials and includes an internal chamber that helps guide the smoke through a controlled path. As the smoke flows through the system, filters or separators trap the soot or black carbon particles present in the smoke. These filters may be physical (like fine mesh) or based on technologies like electrostatic precipitation, which attracts and holds carbon particles using electric charges.

After the soot is captured, it is collected in a small container or holding tank attached to the unit. From there, the soot undergoes a cleaning process to remove toxic chemicals, heavy metals, and oil residues that may have been mixed with it during collection. This cleaning is done using non-toxic solvents or alcohol, which helps purify the carbon and make it safe for reuse. Once the soot is cleaned and dried, it becomes a fine, black powder mostly made of pure carbon. This powder is then transferred to a mixing unit, where it is combined with eco-friendly binding agents, oils, and solvents to form a thick, smooth black ink. The ratio of carbon to liquid materials is carefully adjusted to achieve the right consistency and flow of ink.

This ink can then be packaged in cartridges, bottles, or refillable pens, ready to be used for writing, drawing, or printing. The system is designed to be modular and scalable, meaning it can be used in small setups (like on motorbikes or cars) or scaled up for use in factories or large buildings. The proposed system also includes basic sensors to measure the amount of soot collected, and simple control mechanisms to ensure safety and efficiency during operation. Since this system does not rely on expensive machinery, it is cost-effective and easy to maintain, making it suitable even for developing countries where air pollution levels are high but resources are limited.

Another important feature of the proposed system is its portability and adaptability. The design allows the system to be moved and installed in various locations depending on pollution sources. It also works without requiring a major power source, making it energy-efficient. This system not only helps in reducing air pollution but also provides an opportunity to produce an environmentally friendly alternative to regular ink, which often contains harmful chemicals and is made from non-renewable materials. The proposed system also encourages public participation, as collected soot can be given to community centre or ink-processing units for conversion. In the long term, the system can help improve urban air quality, reduce the number of pollutants released into the environment, and encourage creative solutions to environmental problems. It offers a smart, sustainable, and low-cost alternative to traditional pollution control methods. By turning pollution into a useful product, the proposed smoke-to-ink system sets a strong example of how science, innovation, and environmental care can work together. It is a step toward building greener cities and a more sustainable world, where even harmful waste can be transformed into something valuable and meaningful.

The goal is to convert air pollution—mainly particulate matter (PM) like carbon soot—into usable black ink. This not only reduces airborne pollutants but also provides a sustainable alternative to conventional ink production, which often relies on petroleum-based sources. Captures particulate matter (PM2.5 and PM10), especially carbon-rich soot, from sources such as vehicle exhausts, factory chimneys, or polluted air. The Smoke-to-Ink Converter project introduces an innovative approach to environmental sustainability by transforming harmful air pollutants into usable ink products. Building upon existing technologies developed by companies like Graviky Labs and Chakr Innovation, the proposed system aims to enhance and scale the process of converting vehicular and industrial emissions into eco-friendly inks. The system utilizes a device, similar to Graviky Labs' Kaalink, which is retrofitted to the exhaust pipes of vehicles or industrial generators. This device captures up to 95% of particulate matter, including soot and carbon black, without affecting the engine's performance.

The device imparts an electrostatic charge to the emitted particles, drawing them into a collection chamber. After a specified period, the collected soot is removed and transferred to a processing unit. The collected soot undergoes a series of chemical processes to remove heavy metals, carcinogens, and other impurities. This ensures that the final product is safe for use in various applications The purified carbon is then ground into an ultrafine powder and mixed with solvents and oils to produce different grades of ink suitable for various applications, from fine art to industrial printing.

CHAPTER V

BLOCK DIAGRAM / DESIGN

```
+-------------------+     +---------------------+     +----------------------+
|                   |     |                     |     |                      |
| Pollution Source  +---->+ Pollution Collection +---->+ Soot Extraction &     |
| (e.g., vehicle    |     | Unit (e.g., Kaalink) |     | Purification         |
| exhaust, factory  |     |                     |     |                      |
| emissions)        |     |                     |     |                      |
|                   |     |                     |     |                      |
+-------------------+     +---------------------+     +----------------------+
                                |                           |
                                v                           v
                     +-------------------+     +----------------------+
                     |                   |     |                      |
                     | Carbon Purification|     | Pigment Processing    |
                     | & Detoxification   |     | (Grinding & Mixing)   |
                     |                   |     |                      |
                     +-------------------+     +----------------------+
                                |                           |
                                v                           v
                     +-------------------+     +----------------------+
                     |                   |     |                      |
                     | Ink Formulation   |     | Quality Control &     |
                     | (Binder & Solvent)|     | Packaging            |
                     |                   |     |                      |
                     +-------------------+     +----------------------+
```

Fig 5.1.Block Diagram

The block diagram shown in the image represents the process of converting pollution (specifically soot from emissions) into usable ink. Here's a simple explanation of each part: The process starts with the Pollution Source, such as vehicle exhaust or factory emissions, which release harmful soot and pollutants into the air. These emissions are then directed to a Pollution Collection Unit, like the example mentioned Kaalink, which captures the soot particles from the air. After collection, the soot undergoes Soot Extraction and Purification to separate the carbon content and remove unwanted materials.

Next, the purified soot is sent to two key processing stages. The first is Carbon Purification & Detoxification, where harmful substances are removed to make the soot safe for use. At the same time, Pigment Processing (which involves Grinding and Mixing) prepares the soot for use as a pigment in ink. Once the carbon is ready, the next stage is Ink Formulation, where binders and solvents are added to create the final ink product. Finally, the process ends with Quality Control & Packaging, where the ink is tested for quality and then packed for distribution. Overall, this diagram outlines a clean and sustainable method of turning air pollution into a useful product—black ink—while helping reduce environmental pollution.

CHAPTER VI

MATERIALS

The listed components and materials serve diverse roles in electronic and mechanical projects, often related to automation, control systems, or DIY engineering. An IR sensor (Infrared Sensor) is used to detect objects or measure distance by emitting and receiving infrared light, commonly used for obstacle detection. A 5V relay is an electromechanical switch that allows low voltage circuits to control higher voltage outputs, ideal for safely activating devices like motors. A DC motor converts electrical energy into mechanical motion and is widely used in robotic and mechanical applications. Resistors are essential passive components that limit electrical current, protect components, and divide voltages in circuits. A bread clip, although not an electronic part, can be used creatively as an insulator or structural piece in quick prototypes. Solder wire is used to join electronic components together on a PCB (Printed Circuit Board)**,** which holds and connects electronic components using conductive pathways. A 1000µF capacitor stores electrical energy and helps in filtering, smoothing voltage, or providing power bursts in circuits. In a more mechanical or automotive context, a Royal Enfield filter refers to an air or oil filter specific to Royal Enfield motorcycles, used to maintain clean operation by filtering out dust or debris**.** Hardware here likely refers to mechanical components like nuts, bolts, and frames required for structural support or mounting. A hair dryer can be creatively repurposed in electronics for applying heat during processes like heat-shrink tubing or softening adhesives. A 12V battery serves as a power source for DC electronics, offering portability and sufficient voltage for motors and relays. Finally, the 7906 IC is a voltage regulator that provides a stable 6V output, ensuring sensitive components receive consistent voltage regardless of input fluctuations.

CHAPTER VII

WORKING

The working of the smoke-to-ink conversion system is a step-by-step process that transforms harmful smoke into useful black ink in an eco-friendly way. The system begins by capturing smoke from sources such as vehicle exhausts, factory chimneys, diesel generators, or any other smoke-emitting machines. A smoke collection device is attached near the outlet of these sources. This device is usually a small chamber or a pipe system that can handle high temperatures. As the smoke passes through this device, it contains a lot of soot, which is a fine black powder made of carbon. The next step involves filtering the smoke using either a mesh filter, a cyclone separator, or an electrostatic filter. These filters are designed to trap the carbon particles while allowing clean air or gases to escape. In the case of an electrostatic filter, it works by charging the soot particles and attracting them to metal plates using opposite charges.

Once the soot particles are trapped and collected, they are stored in a container attached to the device. This collected soot cannot be used immediately because it may contain harmful chemicals, heavy metals, and oils. So, the next step is purification. The soot is taken to a cleaning unit or a lab area where it is washed using alcohol, acetone, or other safe solvents. This step removes any toxic materials and ensures the soot is clean and safe for reuse. After cleaning, the soot is dried to remove any moisture. The dried soot becomes a fine black carbon powder, which is the main ingredient for making ink.

In the next step, this carbon powder is transferred to a mixing unit, where it is blended with binders (which help the ink stick to surfaces), solvents (which give the ink a smooth flow), and oils (which improve texture and consistency). Commonly used ingredients include vegetable oil, rubbing alcohol, and other non-toxic liquids. These are mixed thoroughly to create a thick, rich, black ink that can be used for pens, markers, printers, or even for painting and calligraphy. The mixture is then passed through a fine mesh or strainer to remove any lumps or unwanted particles and to ensure the ink is smooth. Finally, the finished ink is poured into containers, such as ink bottles, cartridges, or refillable pens, ready for use.

This entire process is designed to be energy-efficient and environmentally friendly. It does not require large machines or high electricity usage, making it suitable for both small and large-scale setups. The working system is also modular, meaning it can be adjusted or scaled depending on the size of the smoke source. Small systems can be used on motorbikes or cars, while larger units can be installed in factories. The goal of the system is not just to recycle waste but to also reduce air pollution and create a circular solution where pollution is turned into a useful product. The working of this system also helps in public awareness. When people see ink being made from smoke, it changes their perspective on pollution. What was once considered harmful waste now becomes a creative and productive material. It also opens up opportunities for local employment, as small ink-making units can be set up in communities to process soot and make eco-friendly ink. The system proves that with the right technology and effort, even air pollution can be turned into something meaningful. This entire working process shows how simple science and engineering, when used smartly, can solve big environmental problems in a clean, creative, and sustainable way.

A device, such as Kaalink, is retrofitted to the exhaust pipe of vehicles or generators. It captures particulate matter (PM) emitted from the combustion process. The device activates when the engine starts, drawing in exhaust gases and trapping soot particles. Soot Collection captured soot is stored in a container known as a carbon bank. Typically, it takes about two weeks for the device to fill up completely.

Purification Process Remove harmful components like heavy metals and carcinogens from the collected soot. The soot undergoes chemical treatments, including filtration, heating, and chemical processes to detoxify it.

Ink Production. The purified carbon pigment is mixed with solvents and oils to produce various ink products. This includes markers, screen printing ink, and other artistic inks. Application These are used to resulting ink is applied in various domains, from industrial printing to artistic endeavors.

DIAGRAM:

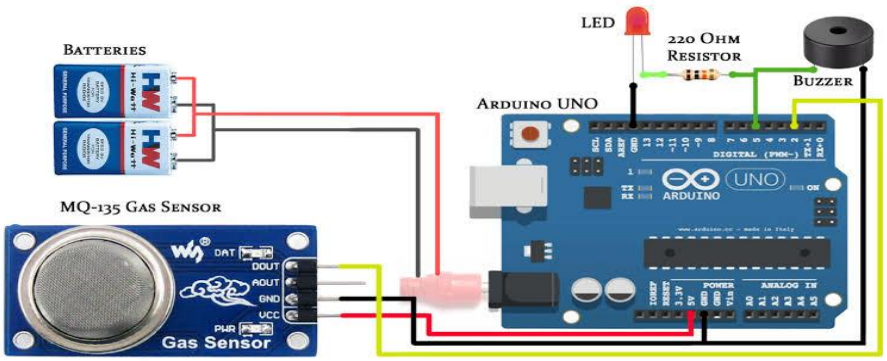

Fig 7.1.Working Diagram

CHAPTER VIII
SOFTWARE DETAILS

In the smoke-to-ink conversion system, software plays an important role in monitoring, controlling, and improving the entire process. While most of the system is mechanical and chemical, the addition of software helps make the process smarter, safer, and more efficient. The software used in this project can be developed using basic programming platforms like Arduino IDE, Python, or Embedded C, especially if the system uses sensors and microcontrollers. The software is mainly responsible for collecting data from the smoke collection unit and controlling the system automatically. For example, if a sensor is used to detect the amount of soot collected or the temperature of the exhaust, the software will read this sensor data and send alerts or adjust system settings.

One of the common software tools used is the Arduino IDE, which works with microcontrollers like Arduino Uno or Mega. These microcontrollers can be programmed to turn fans on or off, check filter conditions, or stop the system if the temperature gets too high. The software may also be used to control the timing of the filtering process, such as when to open or close valves, when to activate pumps, or when to collect soot. If a display screen (LCD) is added to the system, the software can show real-time information like soot levels, system status, air quality, or temperature.

More advanced versions of the system may use IoT (Internet of Things) technology, where data from the smoke filter unit is sent to a computer or smartphone using Wi-Fi or Bluetooth. In such cases, the software might include mobile apps or cloud platforms to monitor the system remotely. This can be helpful for factories or large-scale systems where engineers want to track performance without being physically present. For example, the software can send a notification if the filter is full, if the soot container needs cleaning, or if the system is not working properly. This reduces human error and improves safety.

The software can also help with data logging, which means storing information about how much soot has been collected over time, how much ink has been produced, and how often the system was used. This information is useful for generating reports, improving efficiency, or calculating the environmental impact of the project. Simple programs written in Python can be used to create graphs, monitor trends, or even send emails or alerts to users. If the system is installed in multiple locations, centralized software can collect data from all units and create a full report on how much pollution has been captured and how much ink was produced. This can be useful for government bodies, research organizations, or companies who want to track the benefits of the system. Software also makes it easier to maintain the system, as it can suggest when maintenance is needed, reducing the chances of breakdowns or failure. In the case of a student project or small prototype, the software might be very simple just controlling sensors and displaying data on a small screen. But in large commercial systems, it can be expanded with dashboards, online databases, and automated alerts. Open-source platforms like Thing Speak, Blynk, or Node MCU can be used to create smart monitoring systems without needing expensive tools.

CHAPTER IX

SOURCE CODE

```
// Smoke to Ink Conversion System - Basic Prototype

// Components: MQ-2 Smoke Sensor, LED, Fan (or Motor), Serial Monitor

const int smoke Sensor = A0; // MQ-2 Sensor connected to Analog pin A0

const int led Pin = 7; // LED connected to Digital pin 7

const int fan Pin = 8; // Fan or motor connected to Digital pin 8

int smoke Level = 0; // Variable to store smoke sensor value

int smoke Threshold = 300;// Set threshold value for smoke detection

void setup () {

  pin Mode (smoke Sensor, INPUT); // Set smoke sensor pin as input

  pin Mode (led Pin, OUTPUT); // Set LED pin as output

  pin Mode (fan Pin, OUTPUT); // Set fan/motor pin as output

  Serial.Begin(9600); // Initialize Serial Monitor

  Serial.println("Smoke to Ink Conversion System Initialized");

}

void loop () {

  smoke Level = analog Read (smoke Sensor); // Read analog value from MQ-2 sensor
```

```
  Serial.print("Smoke Level: ");
  Serial.println(smoke Level); // Print smoke level to Serial Monitor
  if (smoke Level > smoke Threshold) {
    digital Write (led Pin, HIGH);
    digital Write (fan Pin, HIGH); // Turn on fan/motor
    Serial.println("Smoke Detected! Starting Soot Collection...");
  } else {
    Digital Write (led Pin, LOW); // Turn off LED
    Digital Write (fan Pin, LOW) ;// Turn off fan/motor
    Serial.println("Air Clean. System Idle.");
  }
  Delay (1000); // Wait for 1 second before the next reading
}
```

OUTPUT 1:

When there is no smoke detector

Smoke to Ink Conversion System Initialized

Smoke Level: 195

Air Clean. System Idle.

Smoke Level: 210

Air Clean. System Idle.

Smoke Level: 225

Air Clean. System Idle.

OUTPUT 2:

When there is smoke detector

Smoke Level: 290

Air Clean. System Idle.

Smoke Level: 260

Air Clean. System Idle.

CHAPTER X
HARDWARE DISCUSSION

Fig 10.1. Model Projet

The hardware used in the Smoke to Ink Conversion System plays a vital role in capturing smoke, filtering soot, and safely converting it into usable ink. The most important component is the smoke collection unit, which is attached to the exhaust outlet of a vehicle, factory chimney, or generator. This unit is made using heat-resistant pipes or chambers that can handle high-temperature smoke. Inside this chamber, a filter system is installed. It may include a mesh filter, a cyclone separator, or an electrostatic plate that helps trap the soot particles from the smoke. The trapped soot is collected in a soot chamber or container, which can be opened for cleaning and collecting the carbon powder.

A power supply module provides voltage to all components, usually 5V or 12V depending on the fan and sensors. In some advanced versions, an LCD display is included to show the real-time smoke level and system status. For safety, the whole unit is placed inside a fireproof and insulated enclosure to avoid damage from heat or sparks. Once the soot is collected, it is manually removed and taken to the chemical processing section, where it is mixed with oils and binders to form ink. The hardware is designed to be compact, low-cost, and energy-efficient, making it suitable for both small-scale use (like on bikes or cars) and larger systems (like in industries). All parts are easy to assemble and can be modified based on available materials. This hardware setup ensures that the system not only captures pollution but also supports the eco-friendly process of turning waste into a useful product like ink. Overall, the hardware plays a crucial role in making the system practical, portable, and environment-friendly.

CHAPTER XI

ADVANTAGES / DISADVANTAGES

ADVANTAGES

- **Reduces Air Pollution:** Captures harmful soot before it enters the atmosphere.
- **Eco-Friendly Product:** Converts waste into usable ink, supporting sustainability.
- **Commercial Use:** Marketable as an eco-ink for printing and art.
- **Raises Awareness:** A creative way to highlight pollution issues.
- **Scalable:** Can be adapted for factories, vehicles, and other emitters.

DISADVANTAGES

- **High Cost:** Expensive to develop, install, and maintain.
- **Limited Scope:** Only captures carbon particles, not all pollutants.
- **Processing Issues:** Soot purification is complex and may affect ink quality.
- **Health Risks:** Handling raw soot requires safety measures.
- **Small Market:** Niche demand for this type of ink

CHAPTER XII

CONCLUSION

Conclusion: The Smoke-to-Ink Conversion project exemplifies an innovative fusion of environmental stewardship and industrial application. By turning pollutants into valuable products, it not only addresses environmental concerns but also promotes economic growth and resource efficiency. With continued development and support, this initiative has the potential to make a substantial impact on both local and global scales.

REFERENCES

SL.NO.	TITLE	NAME OF JOURNAL/PUBLICATION	AUTHOR	YEAR
1.	Green ink revolution	Manufacturing framework for 3D printable inks	Anirudh Thor bole	2024
2.	The latest advance in ink based nanogenerators	explores advancements in ink based nanogenerators for energy harvesting	Zhiatao chen	2024
3.	3D printing technologies in advanced gas sensing	Printed gas sensors, predominantly fashioned from flexible materials, are rapidly emerging as pivotal tools for gas detection, holding immense promise for wearable applications	Quwen jin	2024